MILKRUN TAXI CART BOF
TRT I
INTERNAL TRANSPORT

PRODUCTS TO BE CARRIED

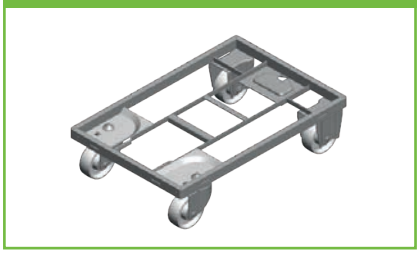

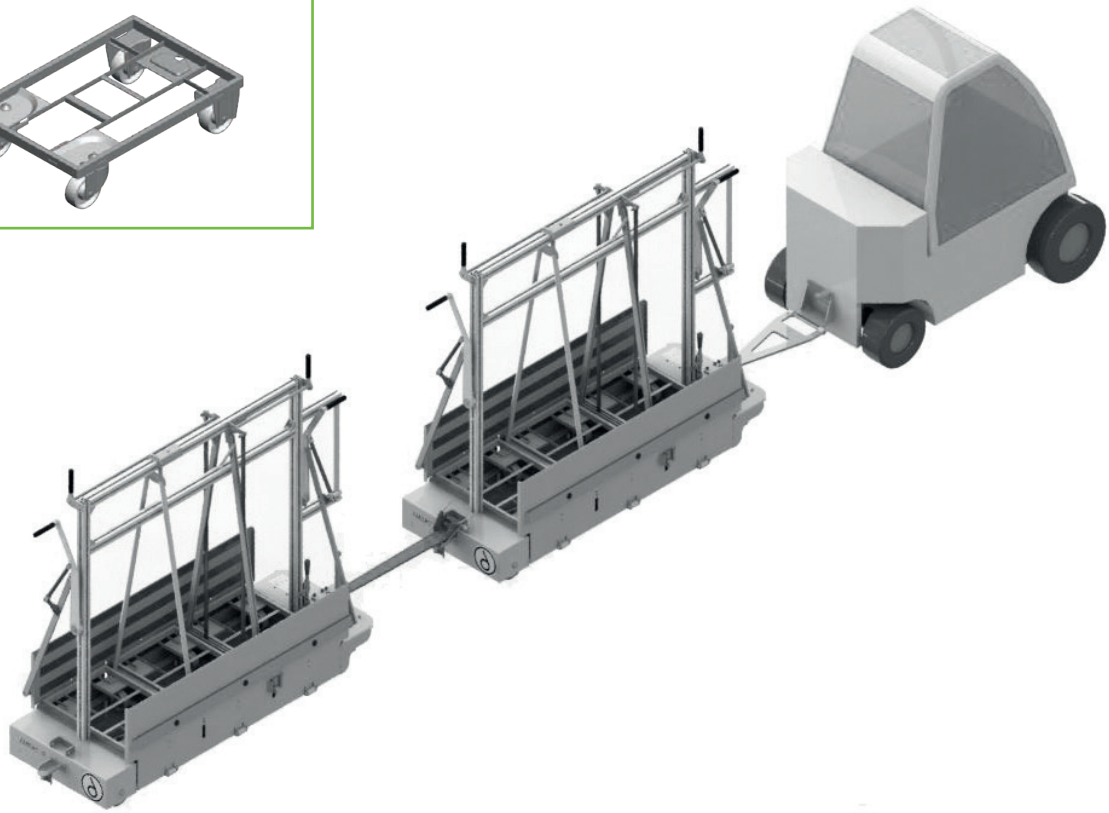

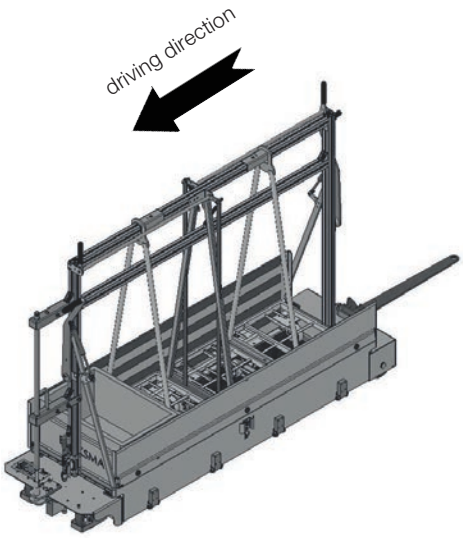

Item no. 138632-4Zell

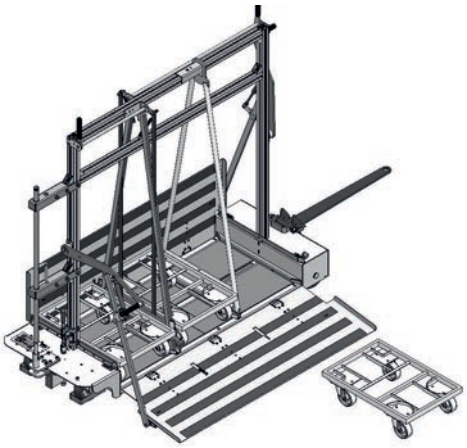

Item no. 138632-3Zell

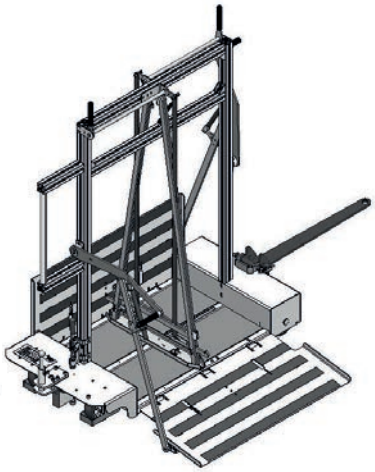

Item no. 138632-2Zell

Other models / dimensions on request
Subject to technical changes

This taxi cart is intended for fast and secure inside transportation of trolleys with stacked boxes. Made for easy handling by unlocking the ramp, moving trolleys onto or off the taxi cart and locking the ramp again. The taxi cart can then continue on it's route. It is all about the smooth opening and closing of the ramps. Various steering systems are available and the drawbars are adapted individually to the tug. Loading is possible from one or both sides. Max. load capacity is 750 kg.

Suitable for trolleys BOF.
For more information please turn to page 22 (Chapter trolleys)

MAX. LOAD CAPACITY
750kg

PRODUCTS TO BE CARRIED
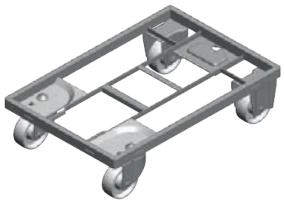

Scan me

Video

Item no.	products to be carried	wheels	steering
TAXI CART WITH 3 SEGMENTS			
138632-3Zell	3 trolley 600x400mm or 1 trolley 800x400mm and 2 trolley 600x400mm loading and unloading from both sides	Ø 160mm Polyurethan	run-down
TAXI CART WITH 4 SEGMENTS			
138632-4Zell	4 trolley 600x400mm or 2 trolley 800x600mm loading and unloading from both sides	Ø 160mm Polyurethan	run-down
TAXI CART WITH 2 SEGMENTS			
138632-2Zell	2 trolley 600x400mm loading and unloading from both sides	Ø 160mm Polyurethan	run-down

MILKRUN TAXI CART BOZ
TRT II
INTERNAL TRANSPORT

PRODUCTS TO BE CARRIED

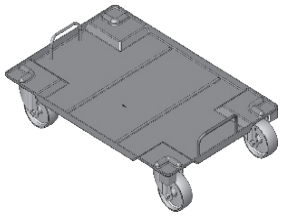

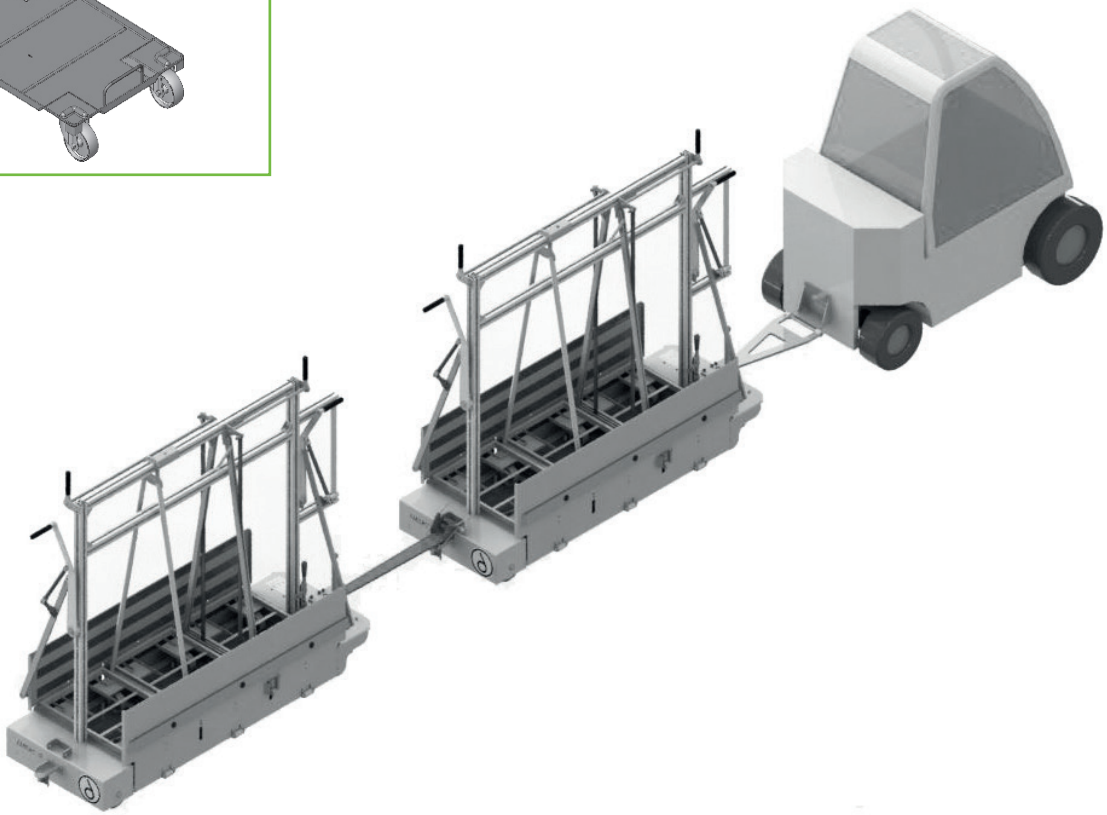

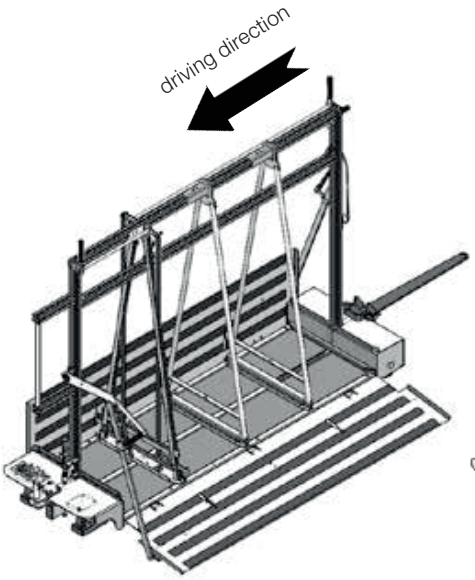

Item no. 201511-4Zell

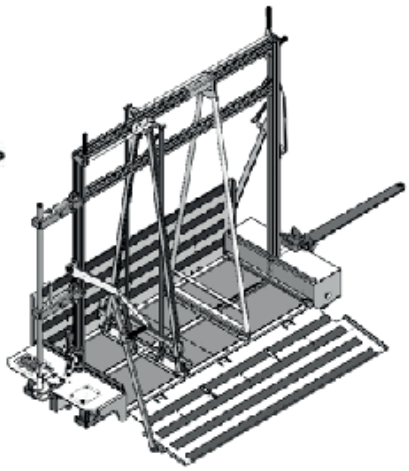

Item no. 201511-3Zell

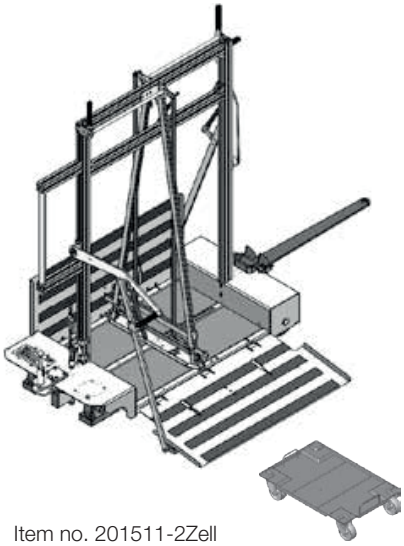

Item no. 201511-2Zell

5

Other models / dimensions on request
Subject to technical changes

This taxi cart is intended for fast and secure inside transportation of trolleys with stacked boxes. Made for easy handling by unlocking the ramp, moving trolleys onto or off the taxi cart and locking the ramp again. The taxi cart can then continue on it's route. It is all about the smooth opening and closing of the ramps. Various steering systems are available and the drawbars are adapted individually to the tug. Loading is possible from one or both sides. Max. load capacity is 750 kg.

Suitable for trolleys BOZ.
For more information about the trolleys to be carried please see page 48 (Chapter trolleys).

MAX. LOAD CAPACITY
750kg

PRODUCTS TO BE CARRIED

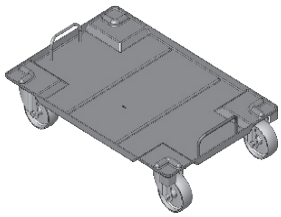

Scan me

Video

Item no.	products to be carried	wheels	steering
TAXI CART WITH 3 SEGMENTS			
201511-3Zell	3 trolley 630x430mm	Ø 160mm Polyurethan	run-down
TAXI CART WITH 4 SEGMENTS			
201511-4Zell	4 trolley 630x430mm	Ø 160mm Polyurethan	run-down
TAXI CART WITH 2 SEGMENTS			
201511-2Zell	2 trolley 630x430mm	Ø 160mm Polyurethan	run-down

MILKRUN TAXI CART
TRT III UND IV
INDOOR TRANSPORT

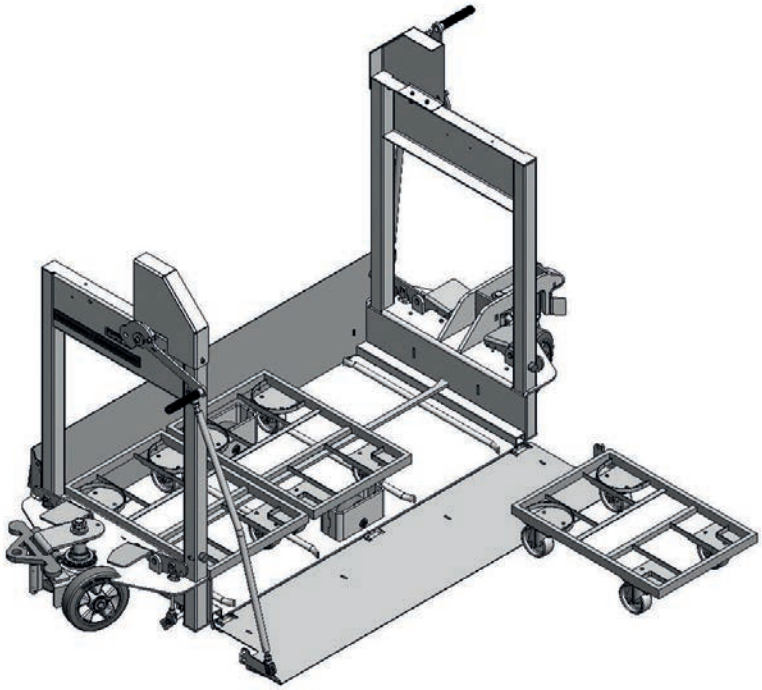

5

Item no. 133287

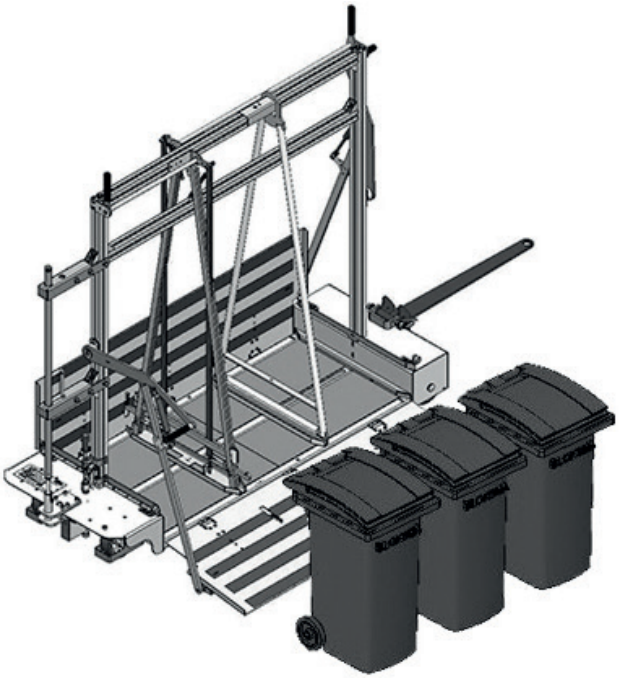

Item no. 145690

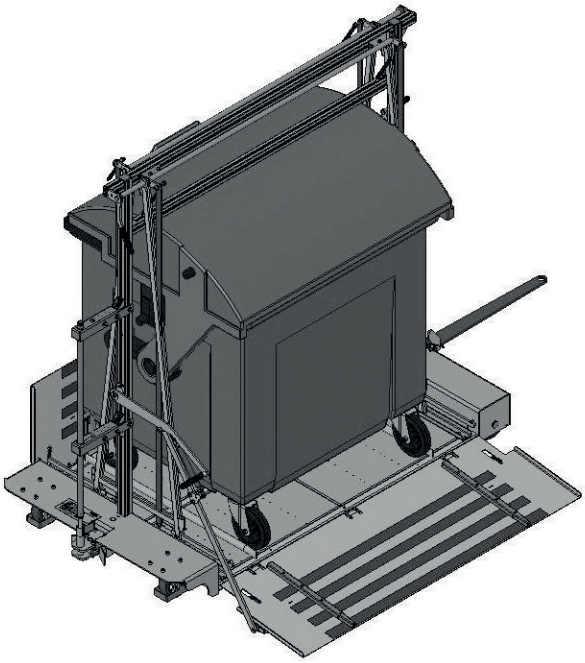

Item no. 145691

Other models / dimensions on request
Subject to technical changes

This taxi cart is intended for fast and secure inside transportation of trolleys with stacked boxes. Made for easy handling by unlocking the ramp, moving trolleys onto or off the taxi cart and locking the ramp again. The taxi cart can then continue on it's route. It is all about the smooth opening and closing of the ramps. Various steering systems are available and the drawbars are adapted individually to the tug. Loading is possible from one or both sides. Max. load capacity is 750 kg.

Suitable for trolleys BOF
For more information about the trolleys to be carried please see page 22 (Chapter trolleys).

MAX. LOAD CAPACITY
750 kg

TAXI CART WITH AXLE-PIVOT STEERING

Item no.	products to be carried	wheels	steering
133287	3 trolley 600x400mm model BOF (section trolley) loading and removal from both sides	Ø 200mm Polyurethan	axle journal controlled

5

TAXI CART FOR GARBAGE CONTAINERS

Item no.	products to be carried	wheels	steering
145690	3 small rubbisch bins	Ø 200mm Polyurethan	run-down
145691	1 big rubbish container	Ø 200mm Polyurethan	run-down

Scan me

Video